District Regulator

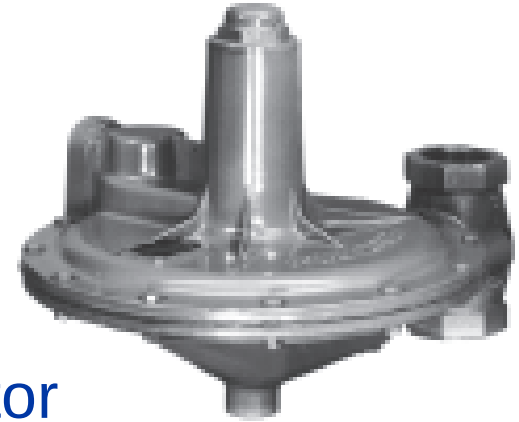

Service Regulator

PRESSURE REGULATION

Farm Tap

Diagram of Distribution Piping

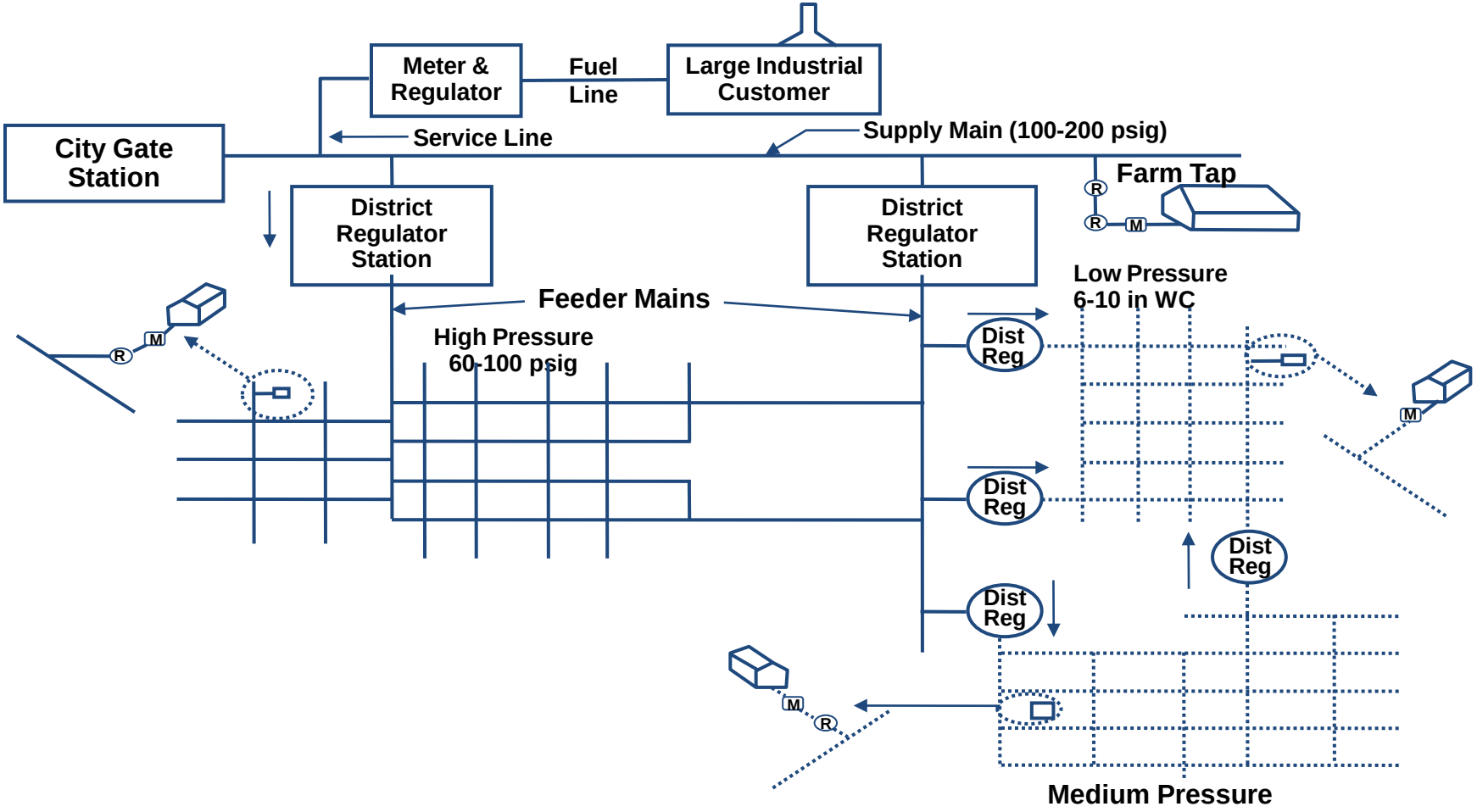

Types of Regulators

- Self operated
- Pilot operated

Self-Operated Regulator
Internal Control

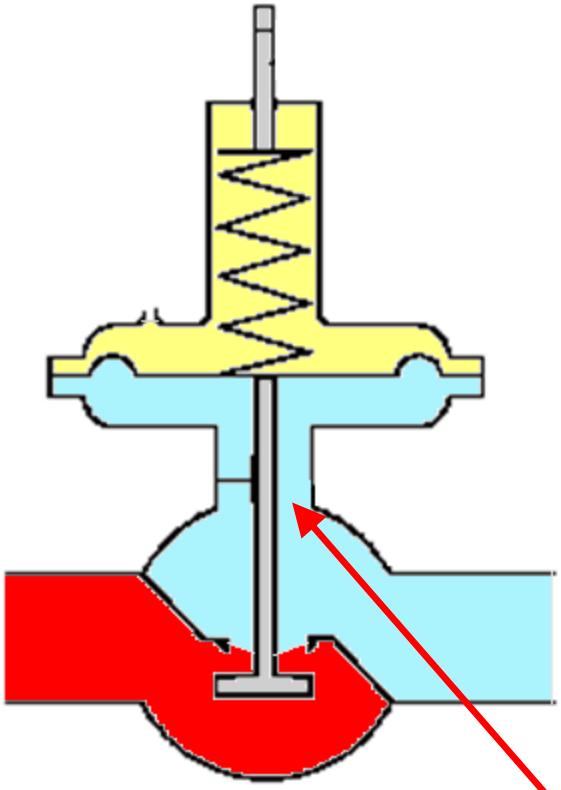

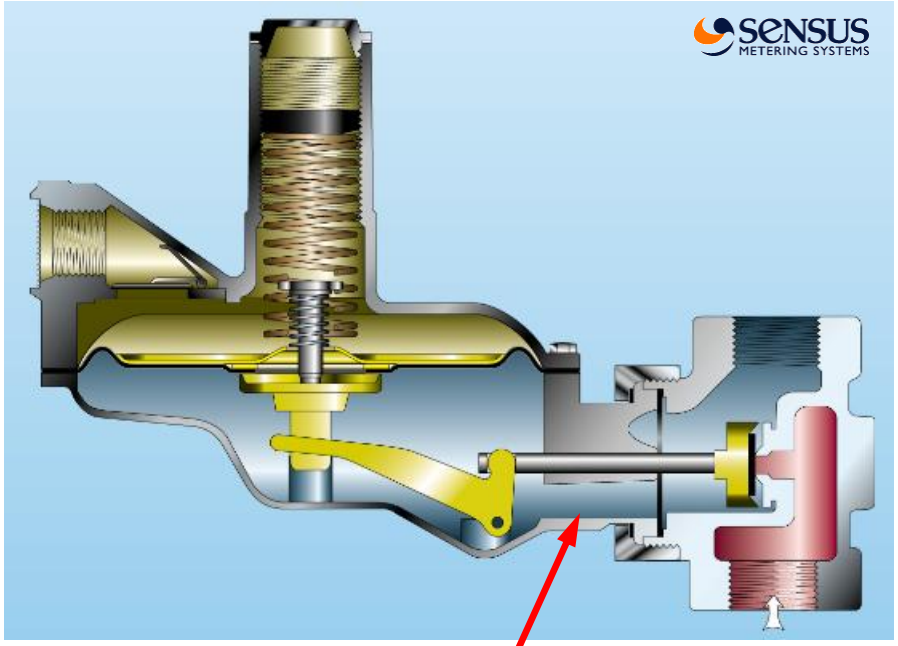

Open Throat
Internal
Control

Three Essential Elements

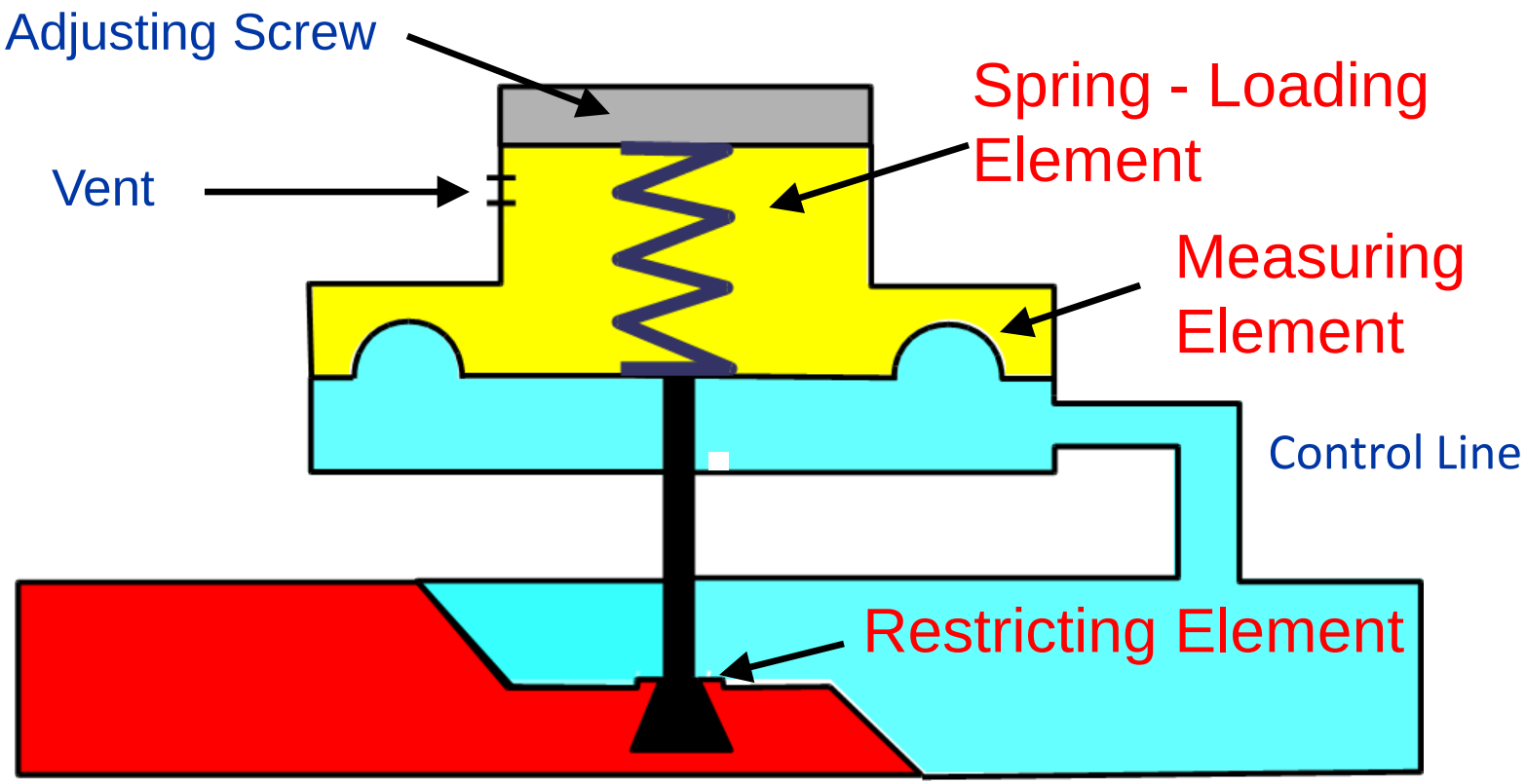

Source: Emerson – Fisher Controls Handbook

Spring-Loading Element

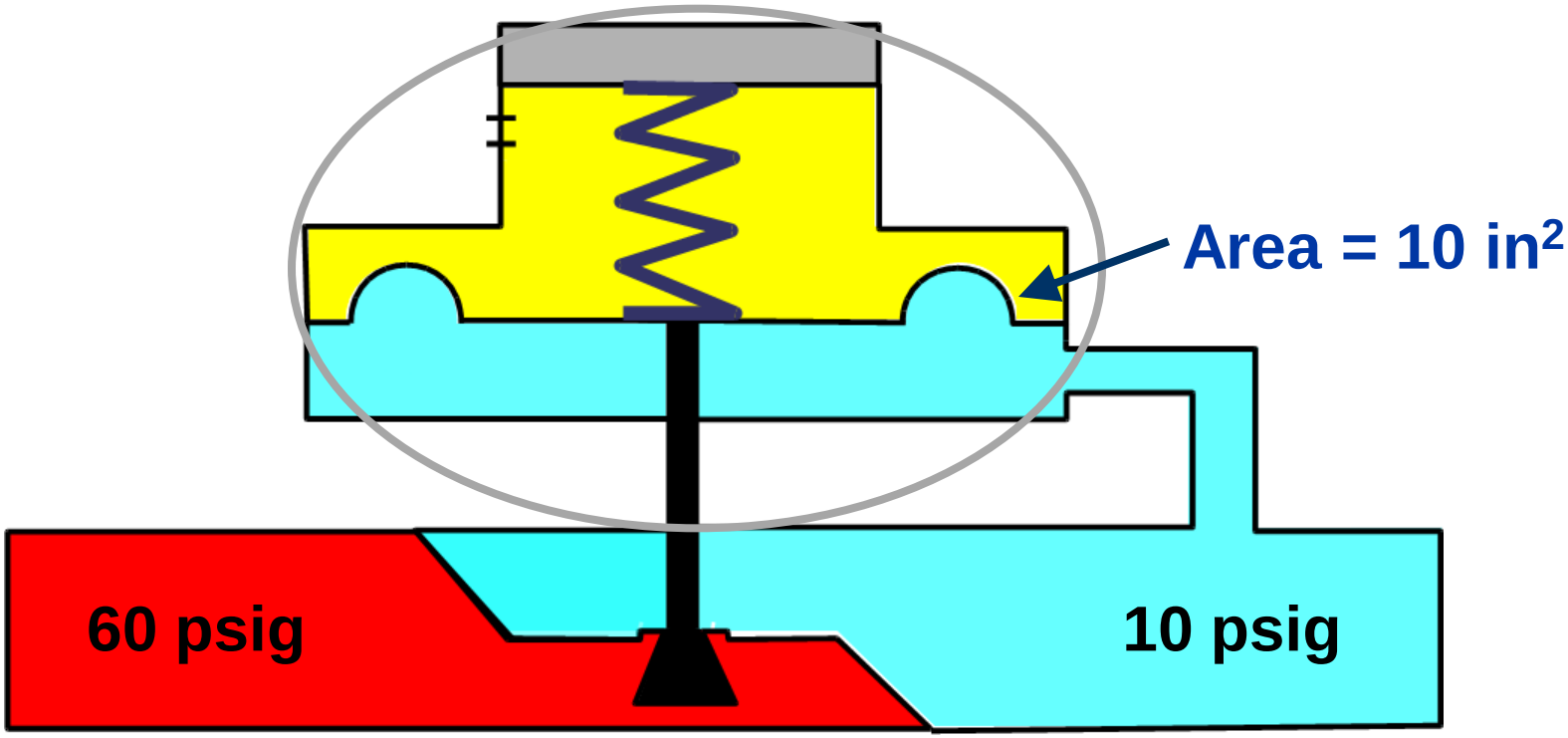

Source: Emerson – Fisher Controls Handbook

Spring Force At Equilibrium

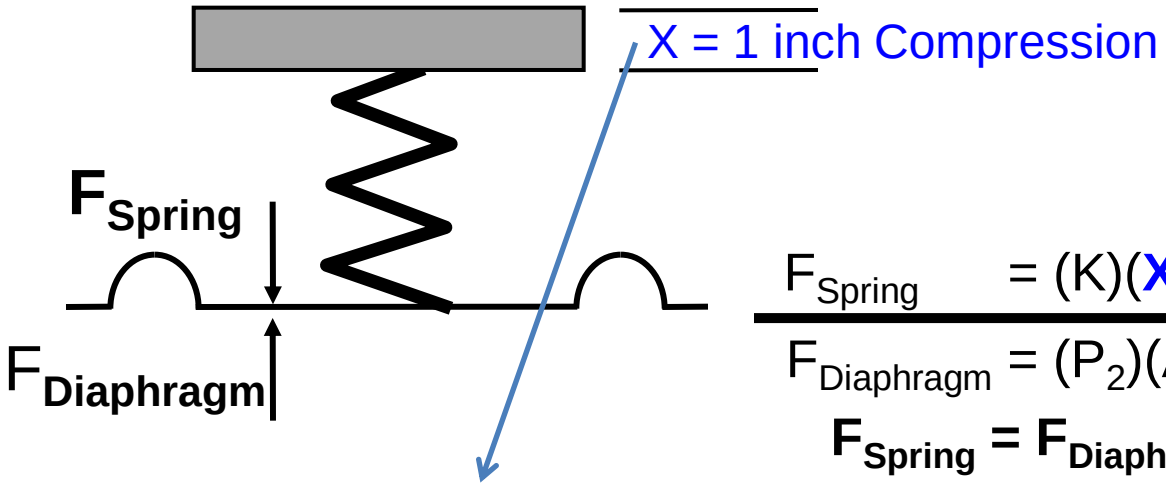

$$F_{Spring} = (K)(X)$$

$$F_{Diaphragm} = (P_2)(A_D)$$

$$F_{Spring} = F_{Diaphragm}$$

$$F_{Spring} = (100\ lb/in)(X) = 100\ lb$$

$$F_{Diaphragm} = (10\ psig)(10sq\ ") = 100\ lb$$

SPRING COMPRESSION RATIO K

K = 100 lbs / inch

To keep Diaphragm from moving

Spring force = **Diaphragm force**

Source: Emerson – Fisher Controls Handbook

Regulator Droop – Plug Travel

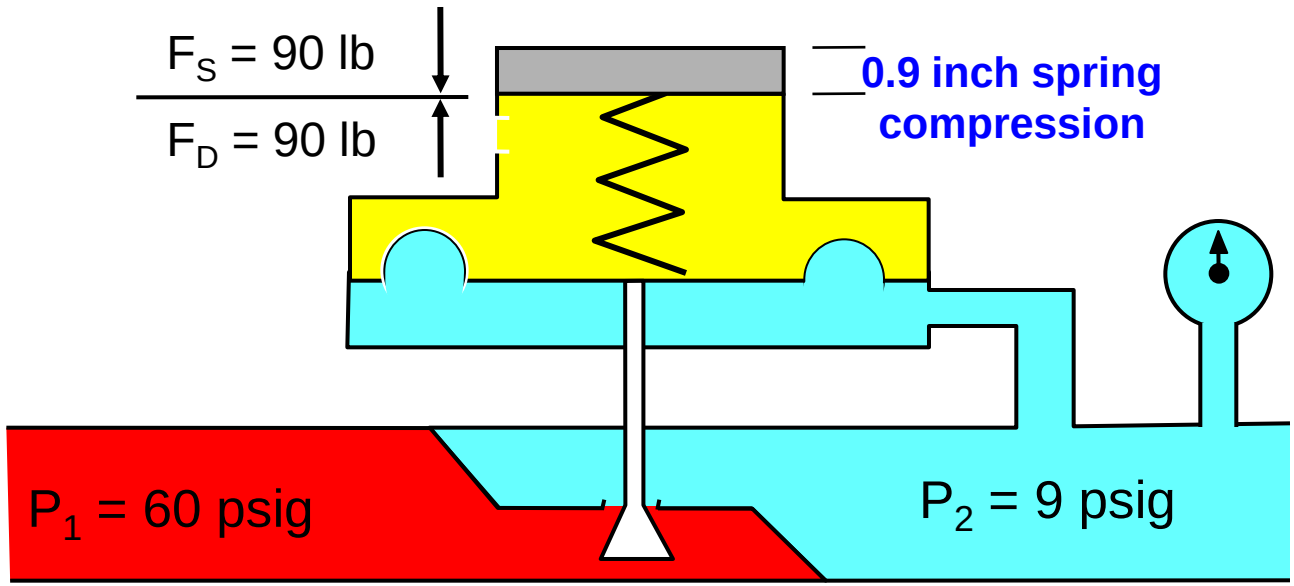

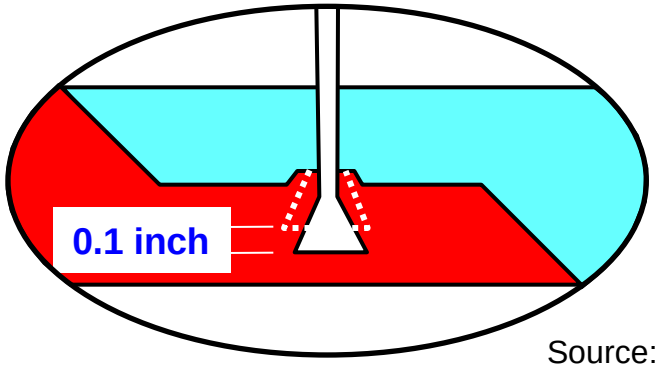

Source: Emerson – Fisher Controls Handbook

Ideal Regulator

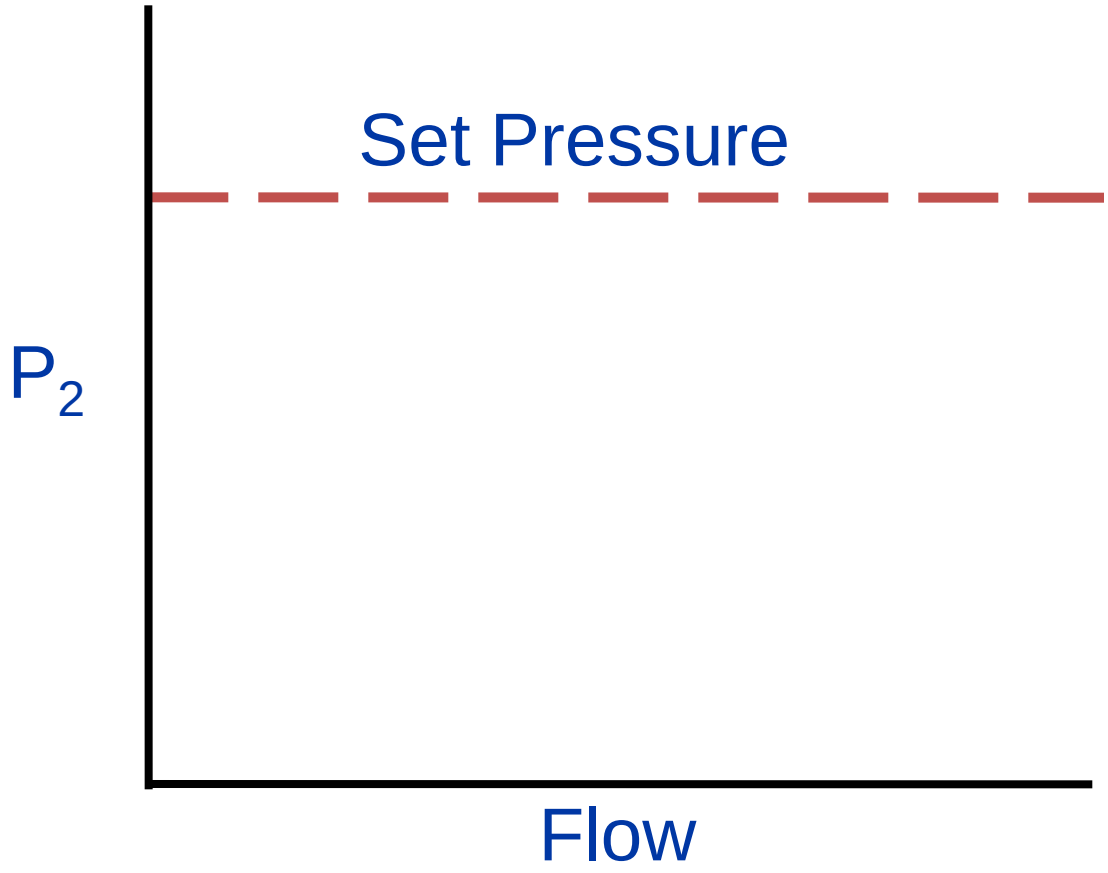

Regulator Droop
Typical Performance Curve

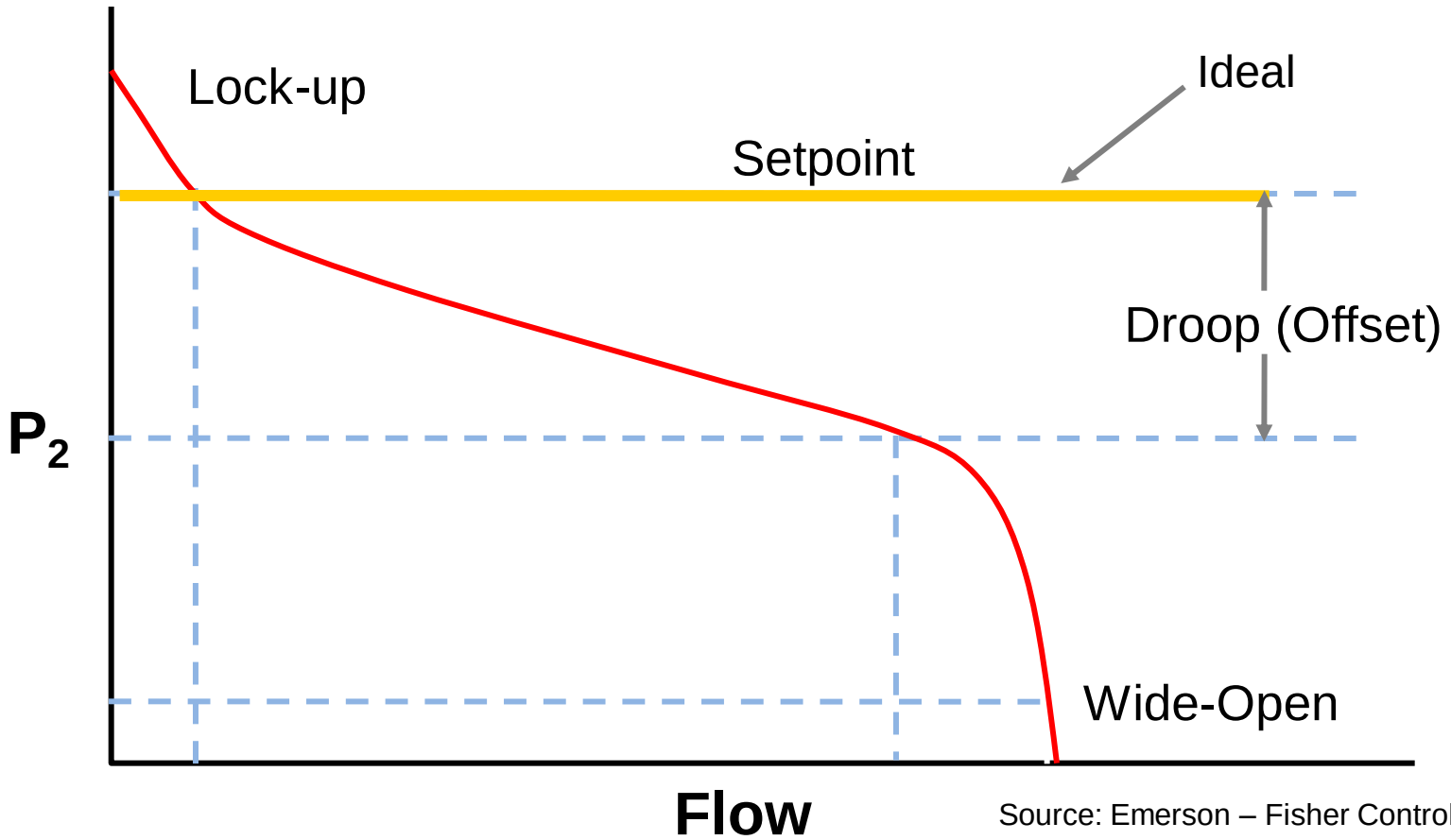

Source: Emerson – Fisher Controls Handbook

Spring Effect

Lighter Spring (10 psig downstream)

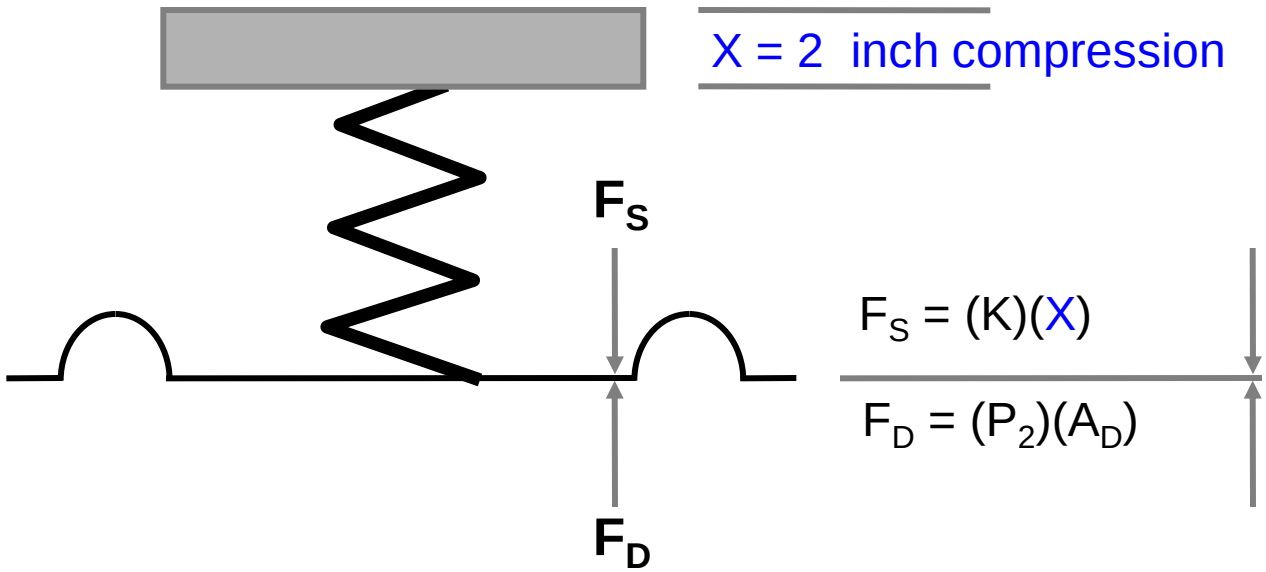

SPRING COMPRESSION RATIO K

K = 50 lbs / inch

F_S = 50 lbs / inch x 2 inches = 100 lbs

F_D = 10 psig x 10 square inches = 100 lbs

Source: Emerson – Fisher Controls Handbook

Spring Effect

Lighter Spring (9 psig downstream)

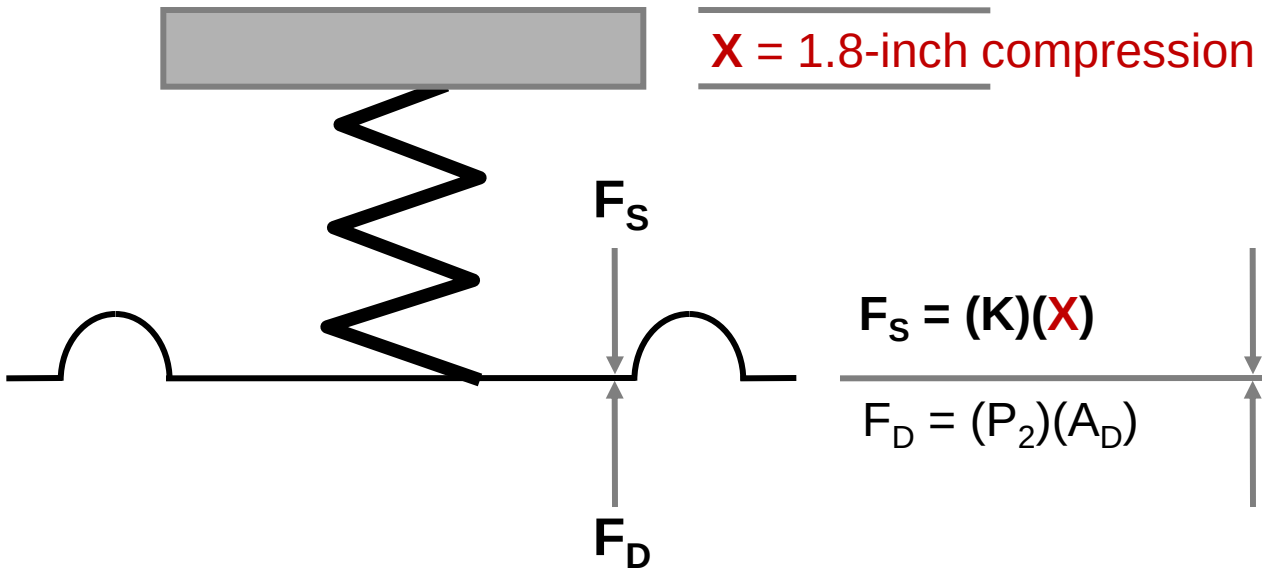

SPRING COMPRESSION RATIO K

K = 50 lbs / inch

F_S = 50 lbs / inch x 1.8 inches = 90 lbs

F_D = 9 psig x 10 square inches = 90 lbs

Source: Emerson – Fisher Controls Handbook

Spring Effect

Lighter Spring (Value Travel)

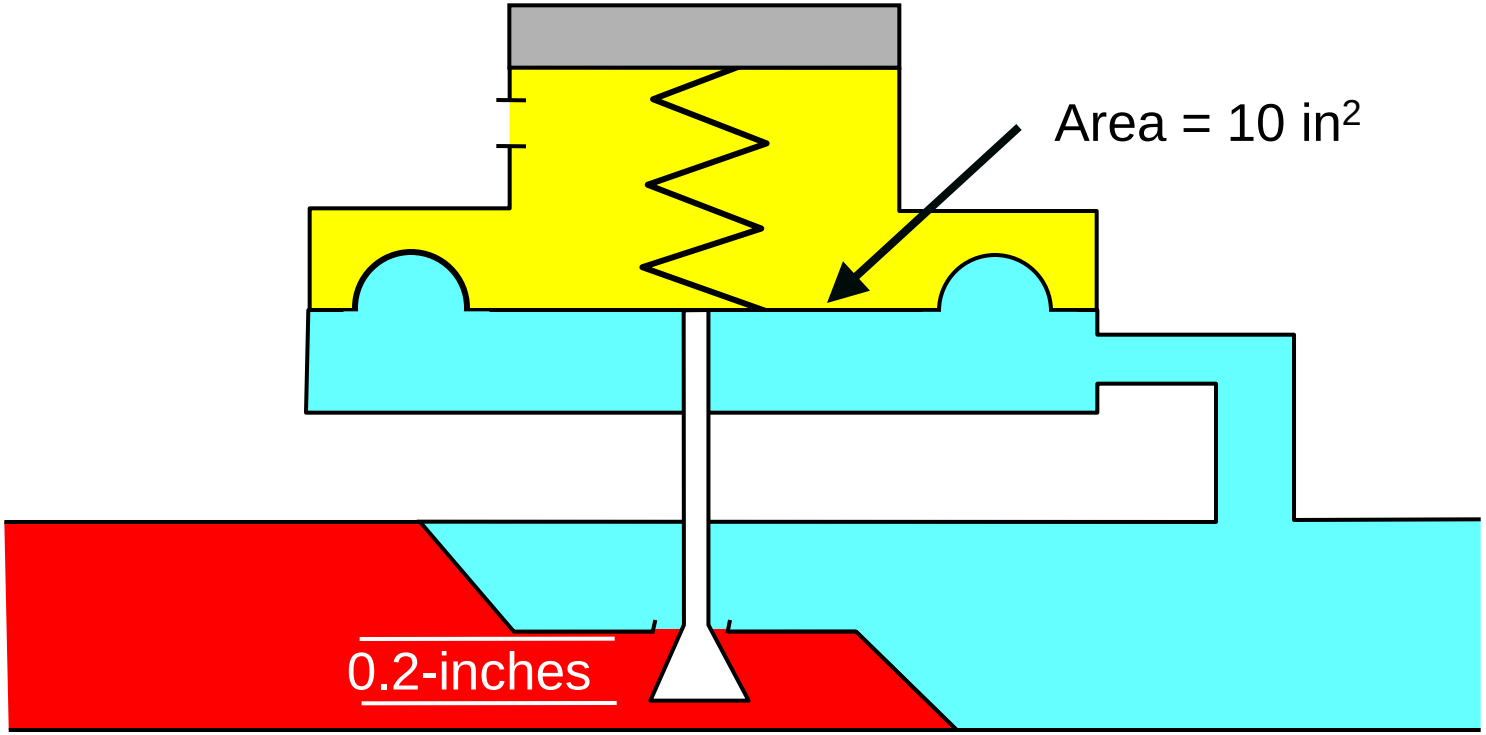

Source: Emerson – Fisher Controls Handbook

Spring Effect

Spring Effect on Accuracy

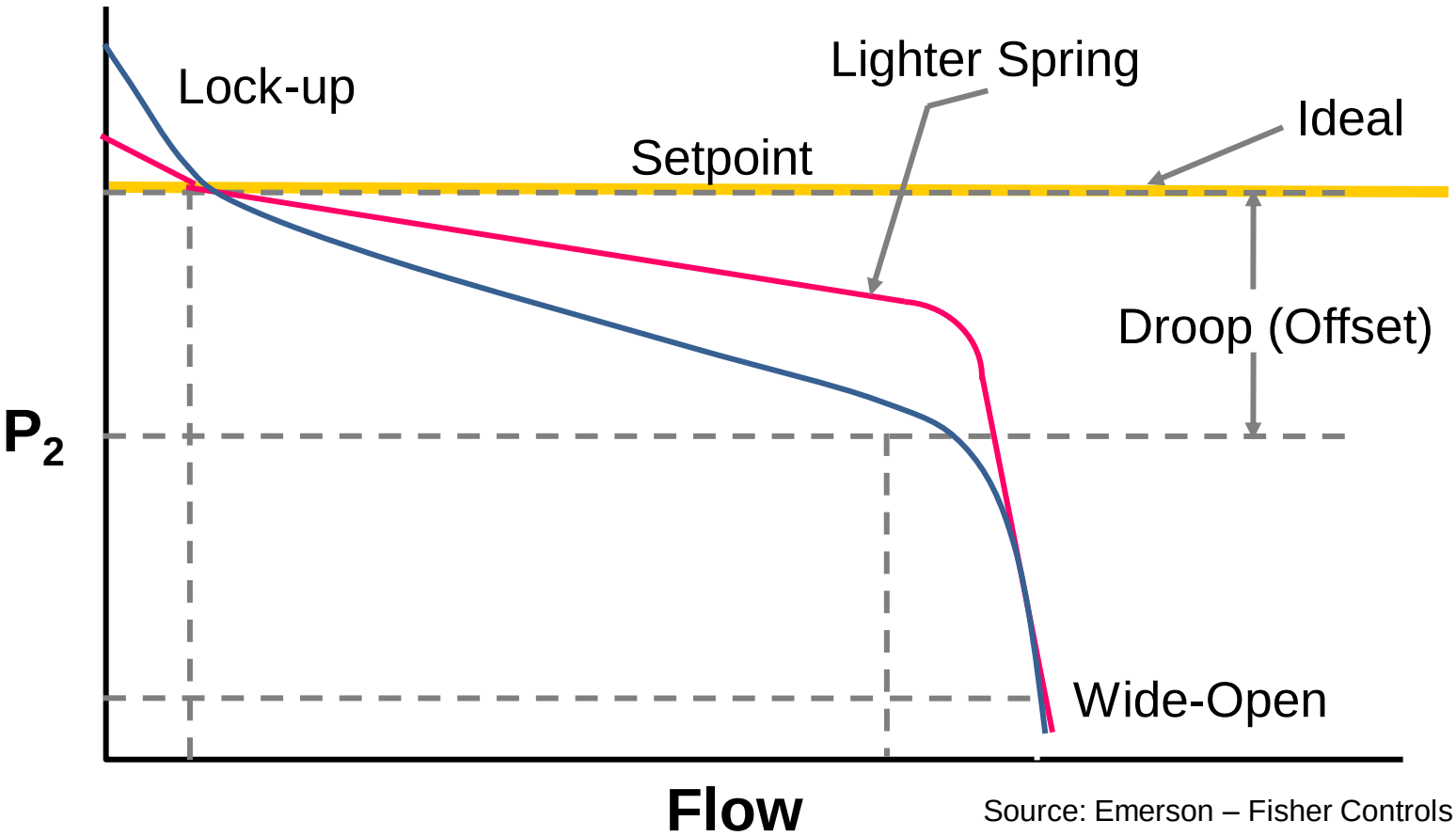

Source: Emerson – Fisher Controls Handbook

Diaphragm Effect

Diaphragm Effect on Droop

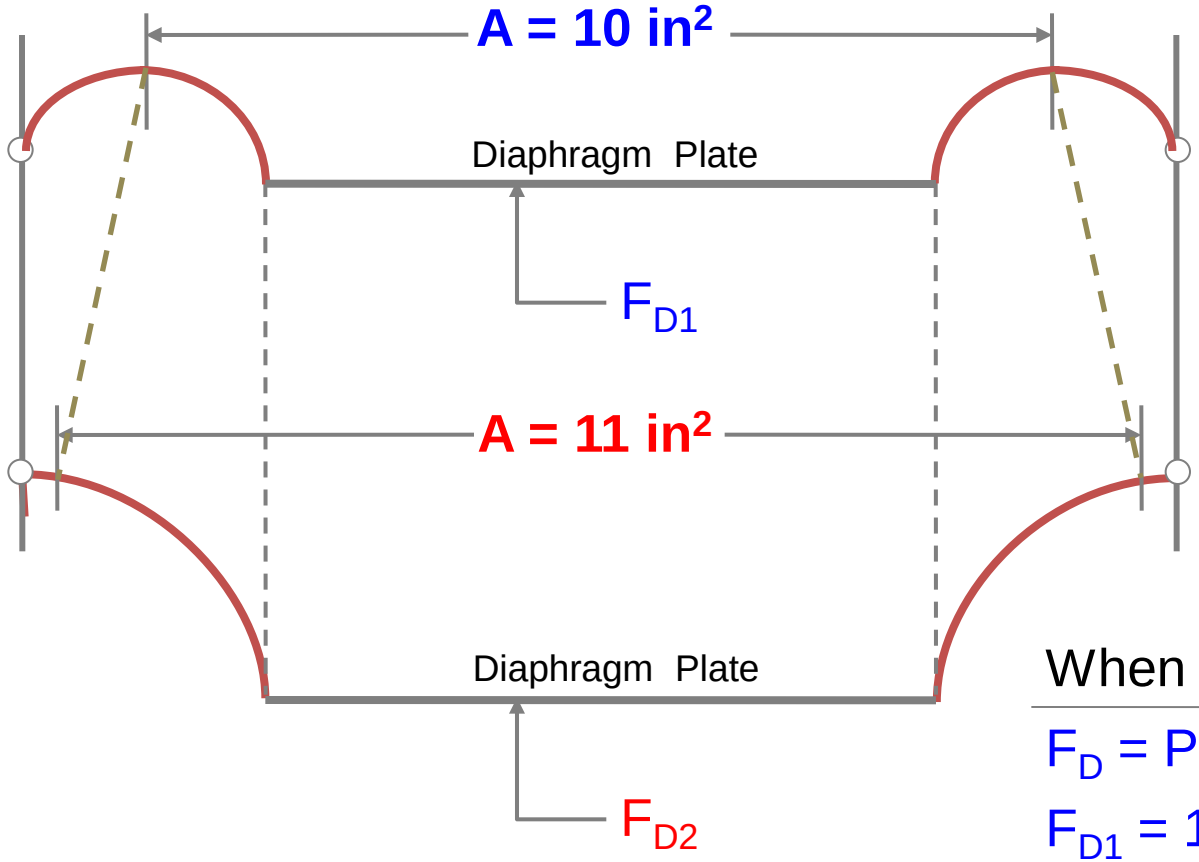

Source: Emerson – Fisher Controls Handbook

When P_2 Droops to 9

$F_D = P_2 \times A$

$F_{D1} = 10 \times 10 = 100$ lb

$F_{D2} = 9 \times 11 = 99$ lb

Diaphragms

- Adds to droop effect
- Can’t be changed
- Larger diaphragms
  - More sensitive to P_2
  - Low pressure (LP) applications
  - Service regulators

Orifice Size

- Increasing orifice size
  - Increases capacity
- Bathtub effect at low flow

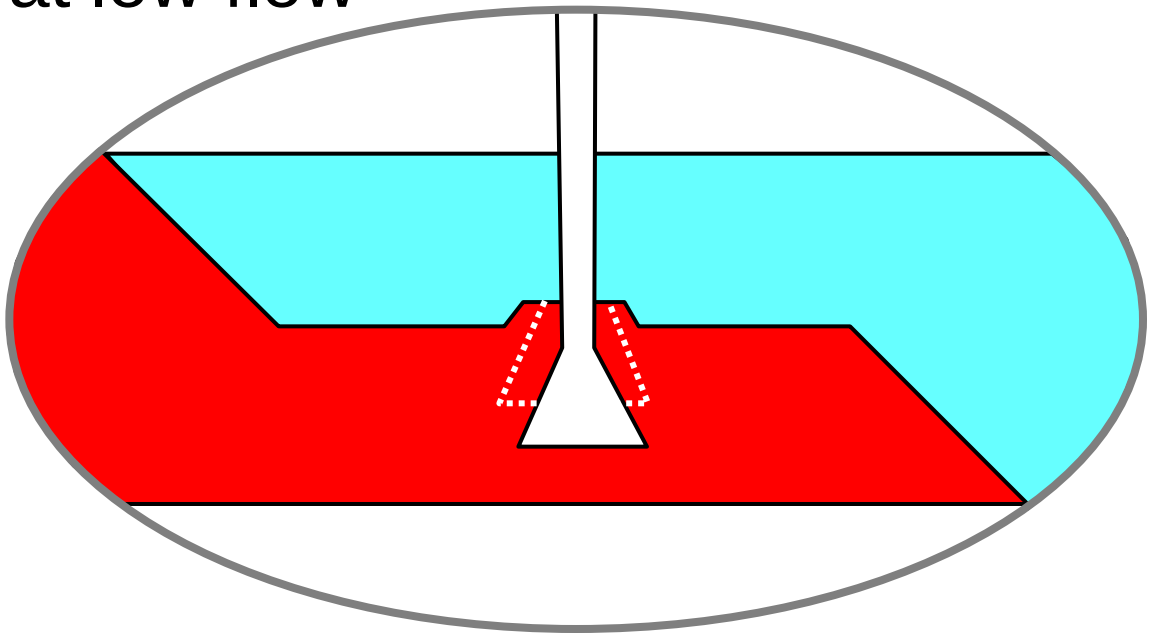

Source: Emerson – Fisher Controls Handbook

Orifice Size

Effect of Oversized Orifice

- Unstable at low flow
- Increases wear

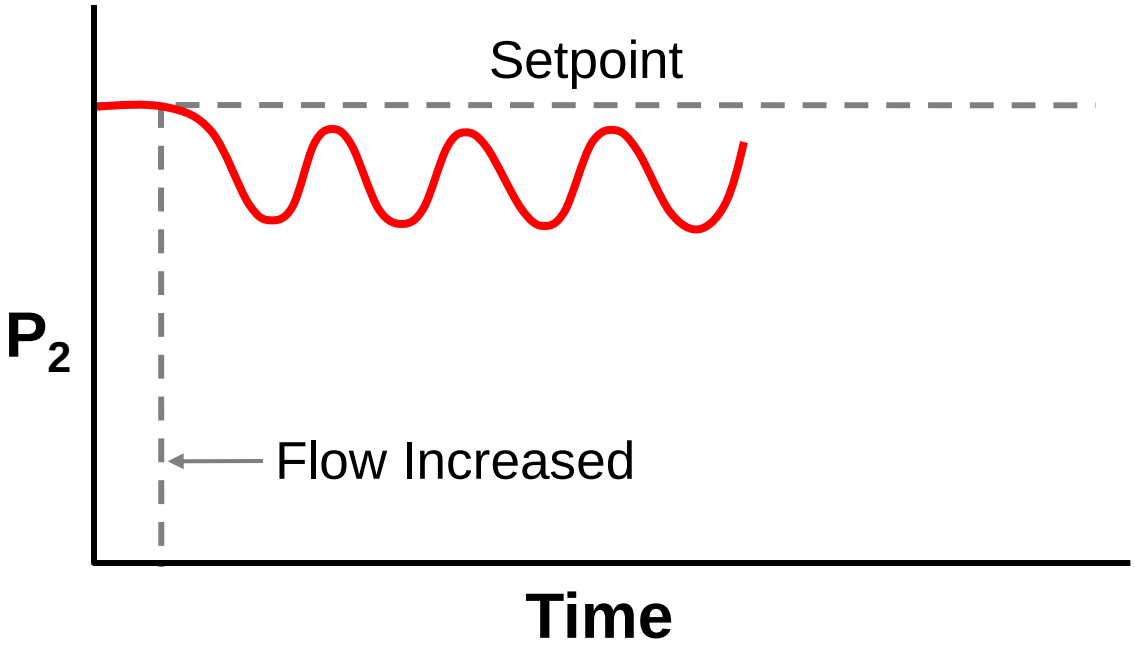

Source: Emerson – Fisher Controls Handbook

Balanced Valve

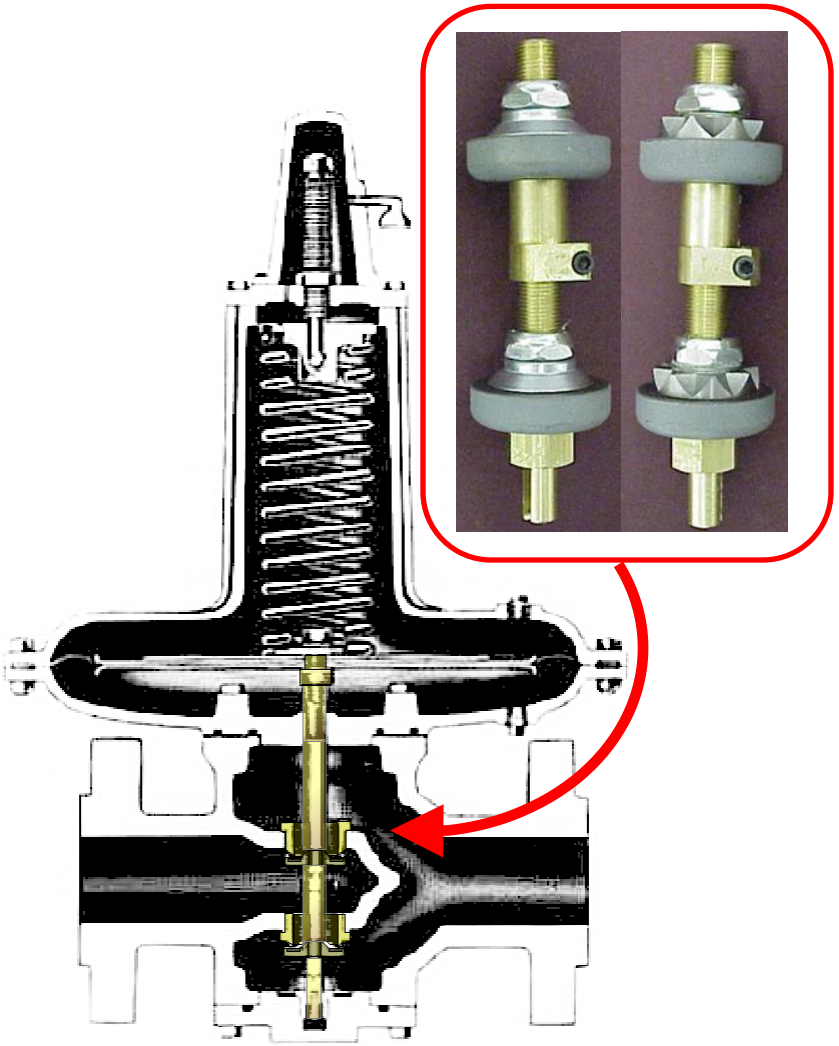

441 & 461 High Capacity Regulators

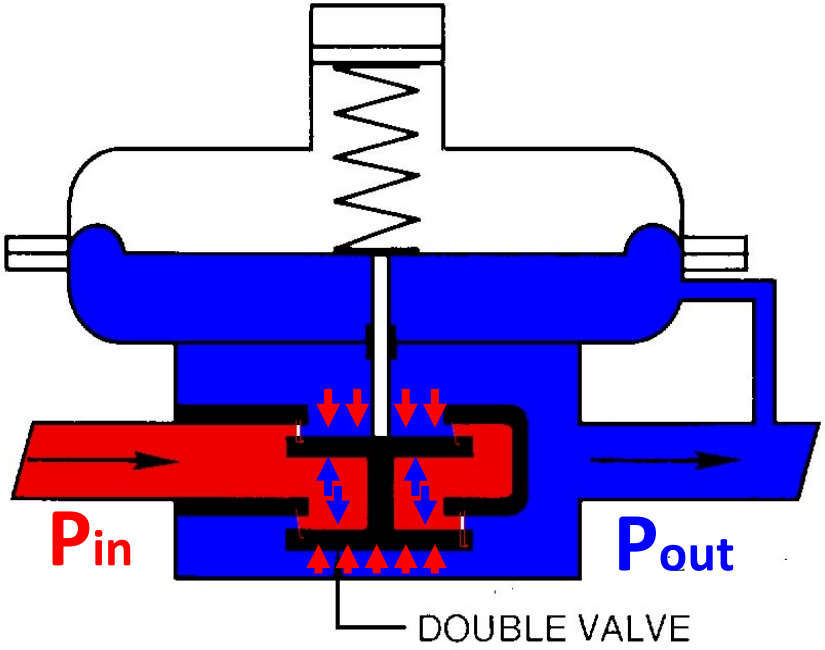

Lock-up and Critical Flow

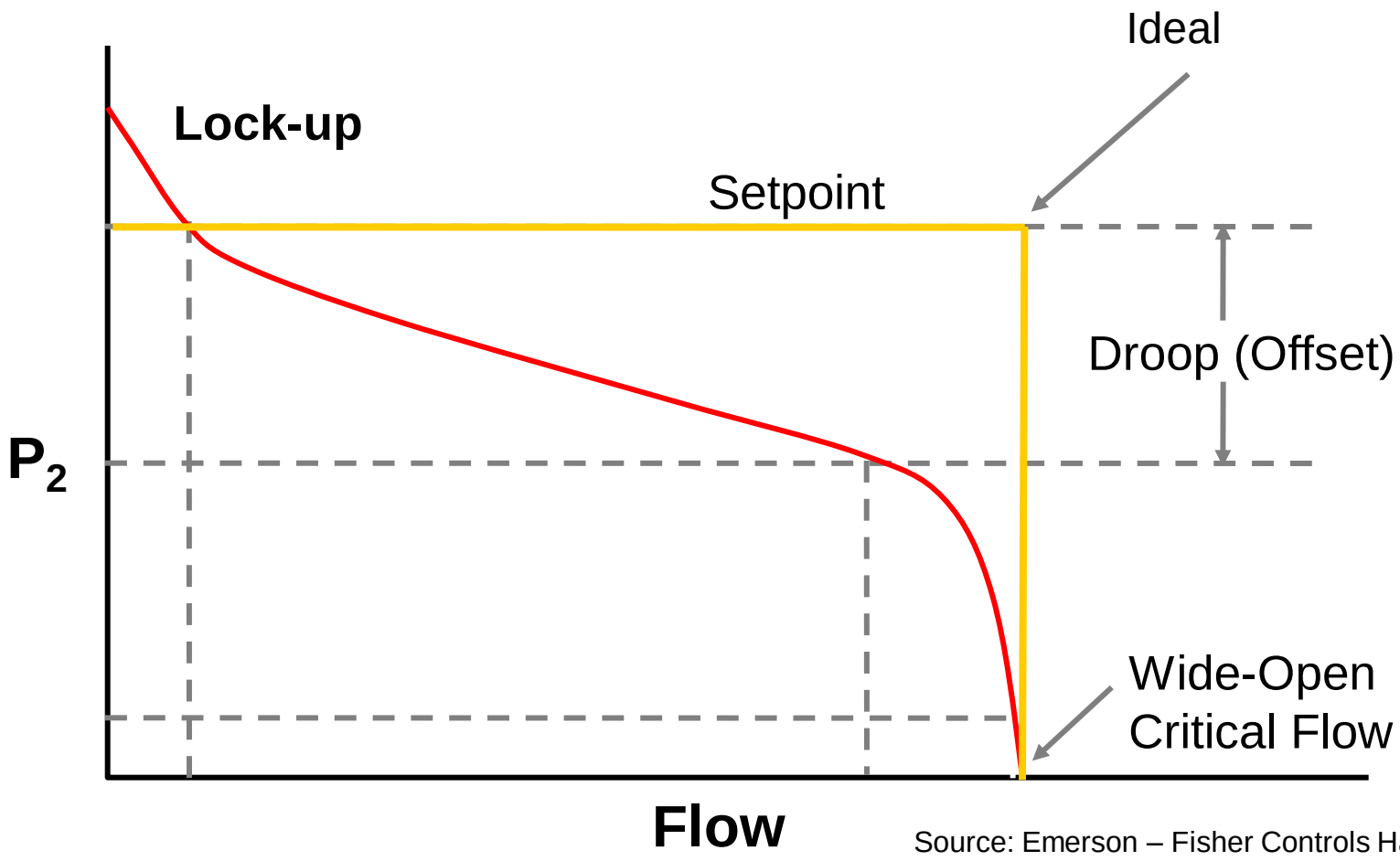

Source: Emerson – Fisher Controls Handbook

Control Lines

- 8-10 pipe diameters downstream of any turbulent flow point (valve, tee, elbow)
  - Avoid outlet riser
- Control Line equal to or greater than tap size
- Increase control line size for every 20 feet in length
- Protect from damage
  - Rigid
  - Buried

Vena Contracta

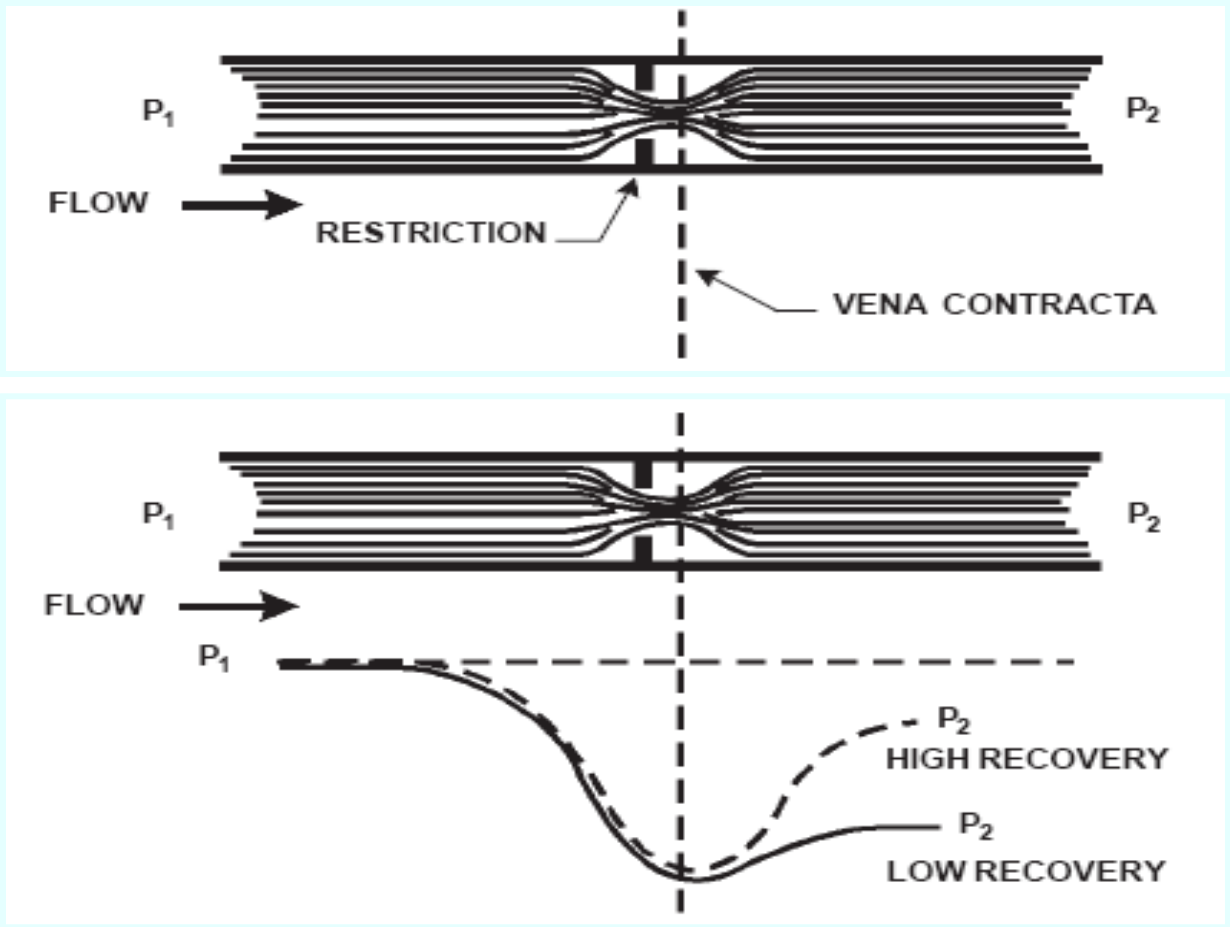

Source: Emerson – Fisher Controls Handbook

Pitot Tube

- Move sensing point closer to orifice

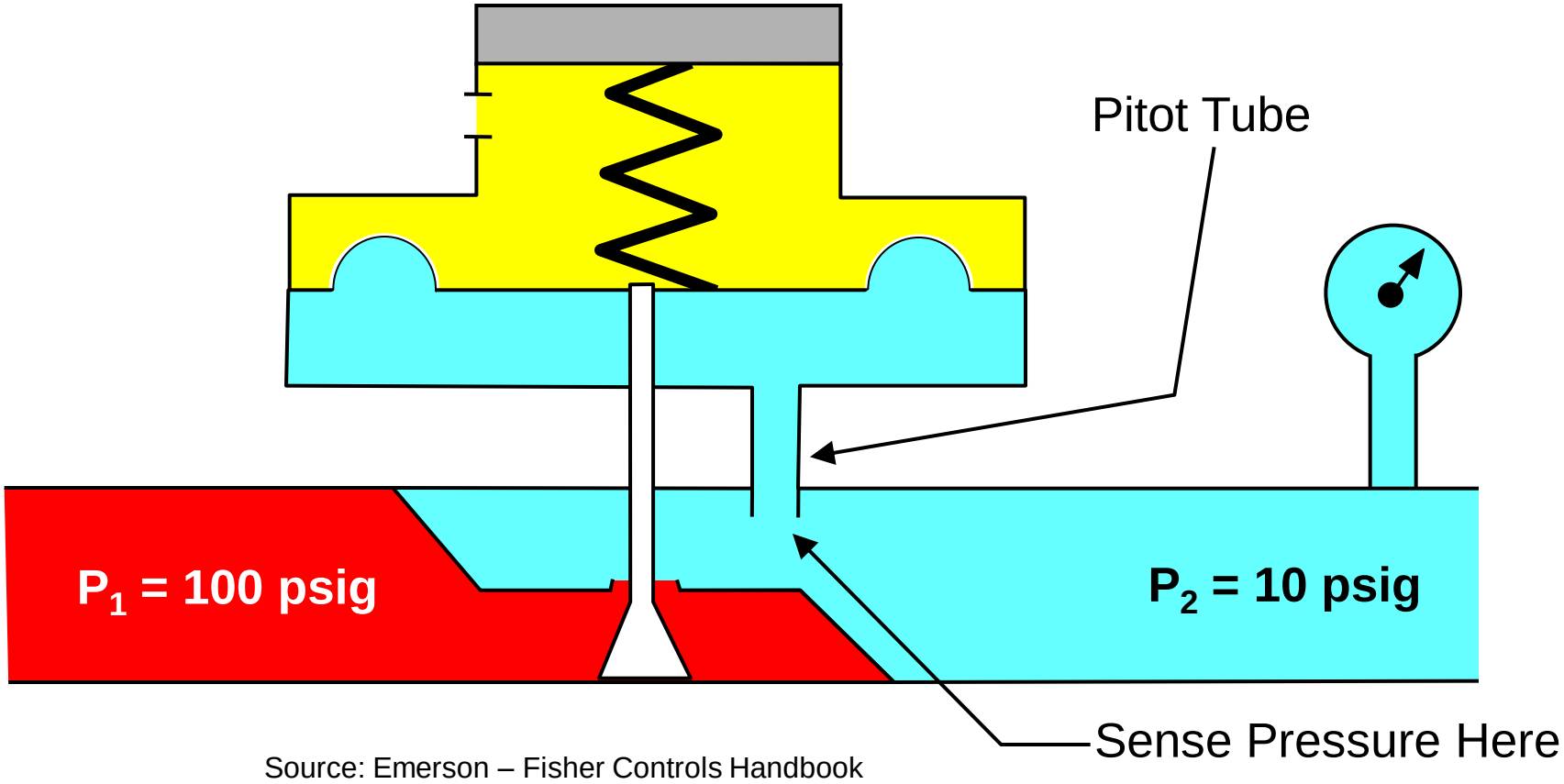

Source: Emerson – Fisher Controls Handbook

Regulator with Pitot Tube

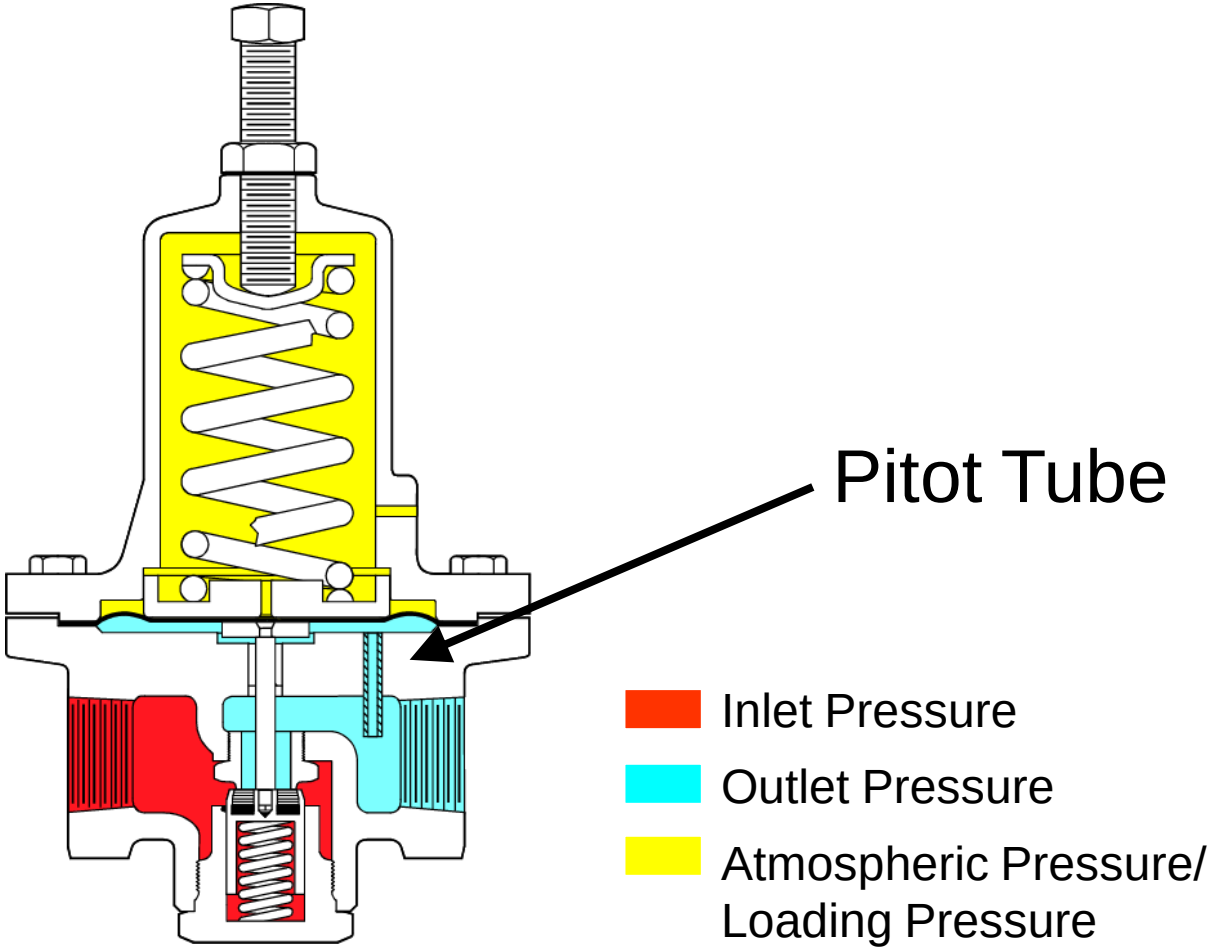

Source: Emerson – Fisher Controls Handbook

Boost

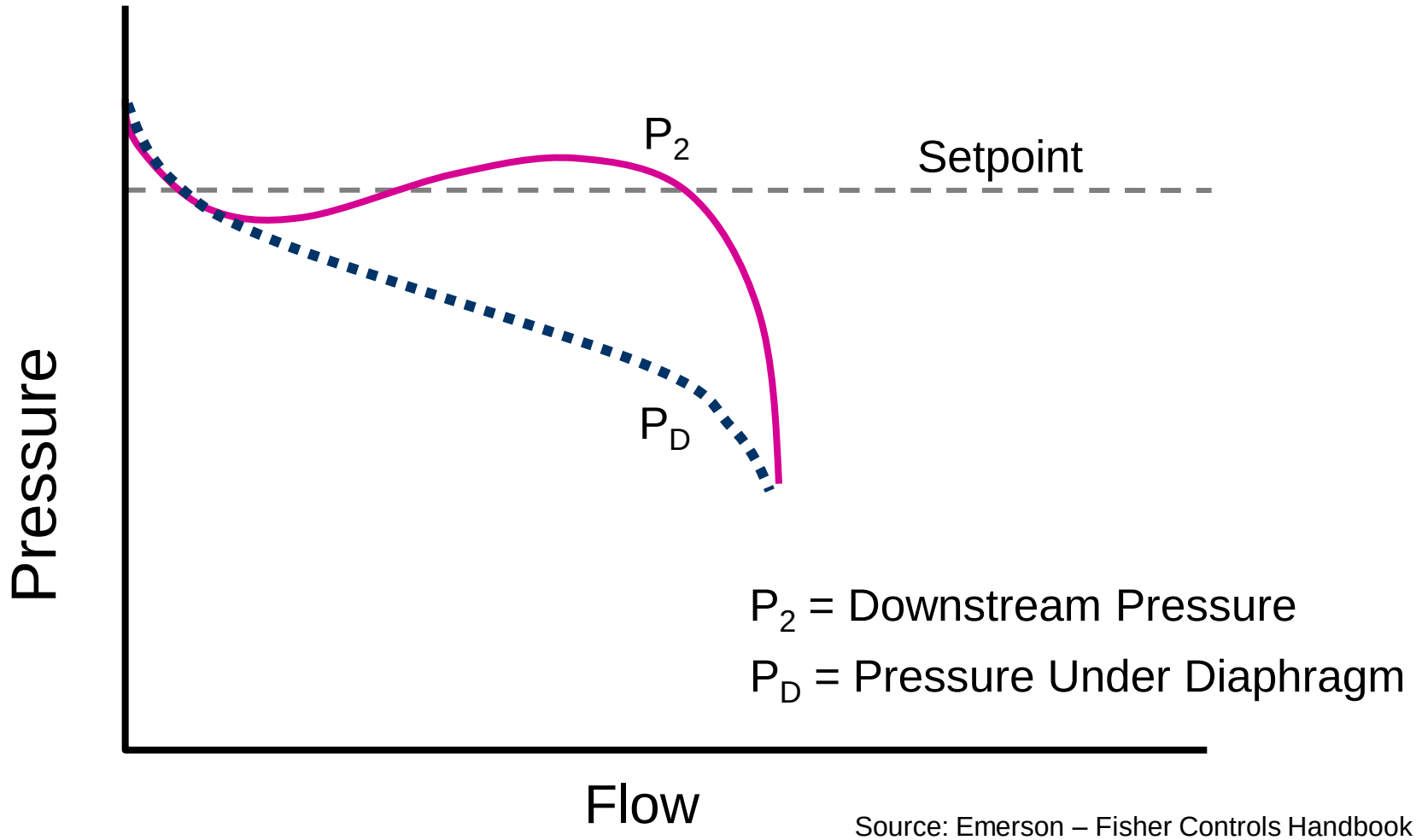

Source: Emerson – Fisher Controls Handbook

Service Regulator

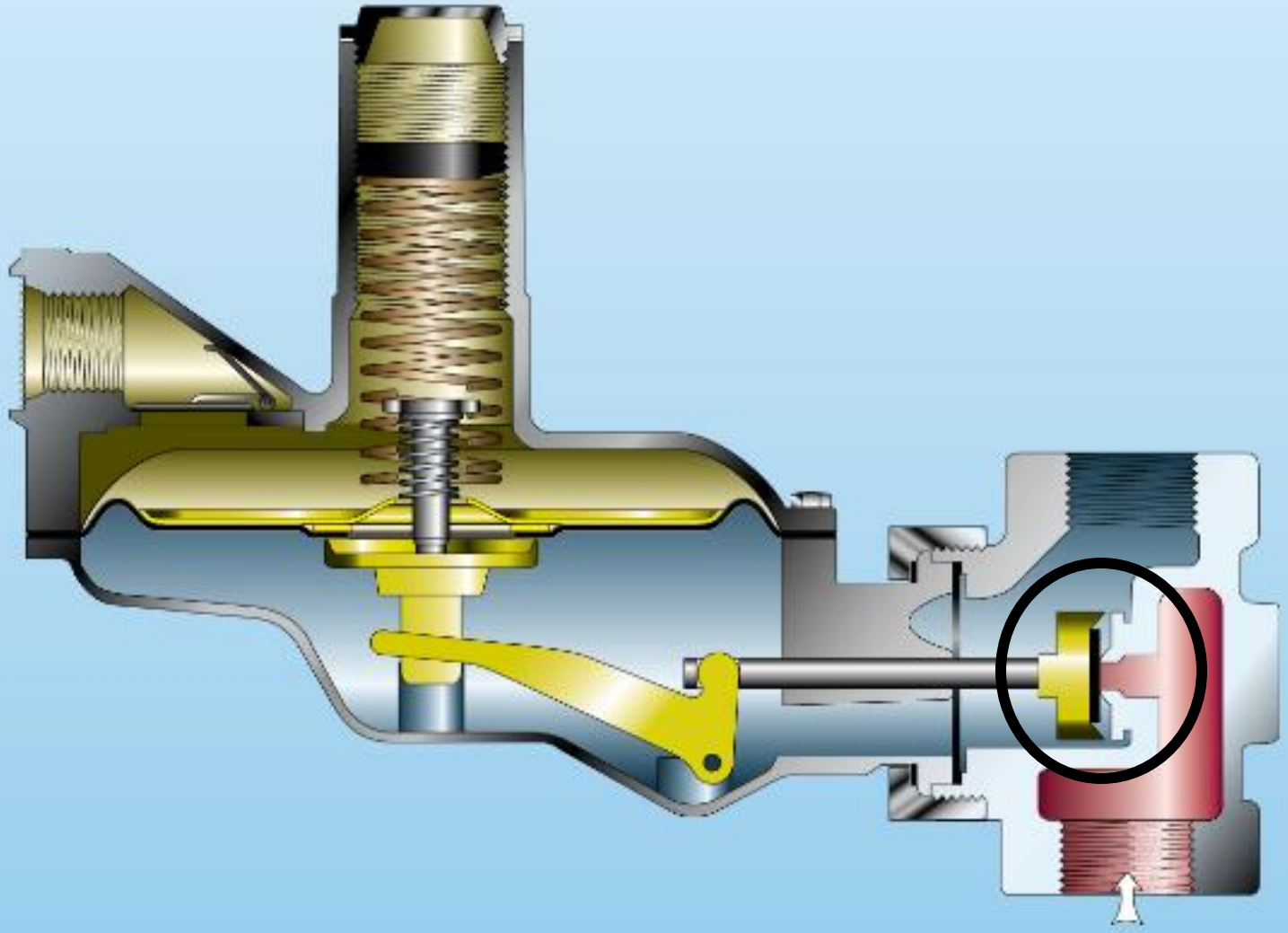

Lever Acting – Close Position

Service Regulator

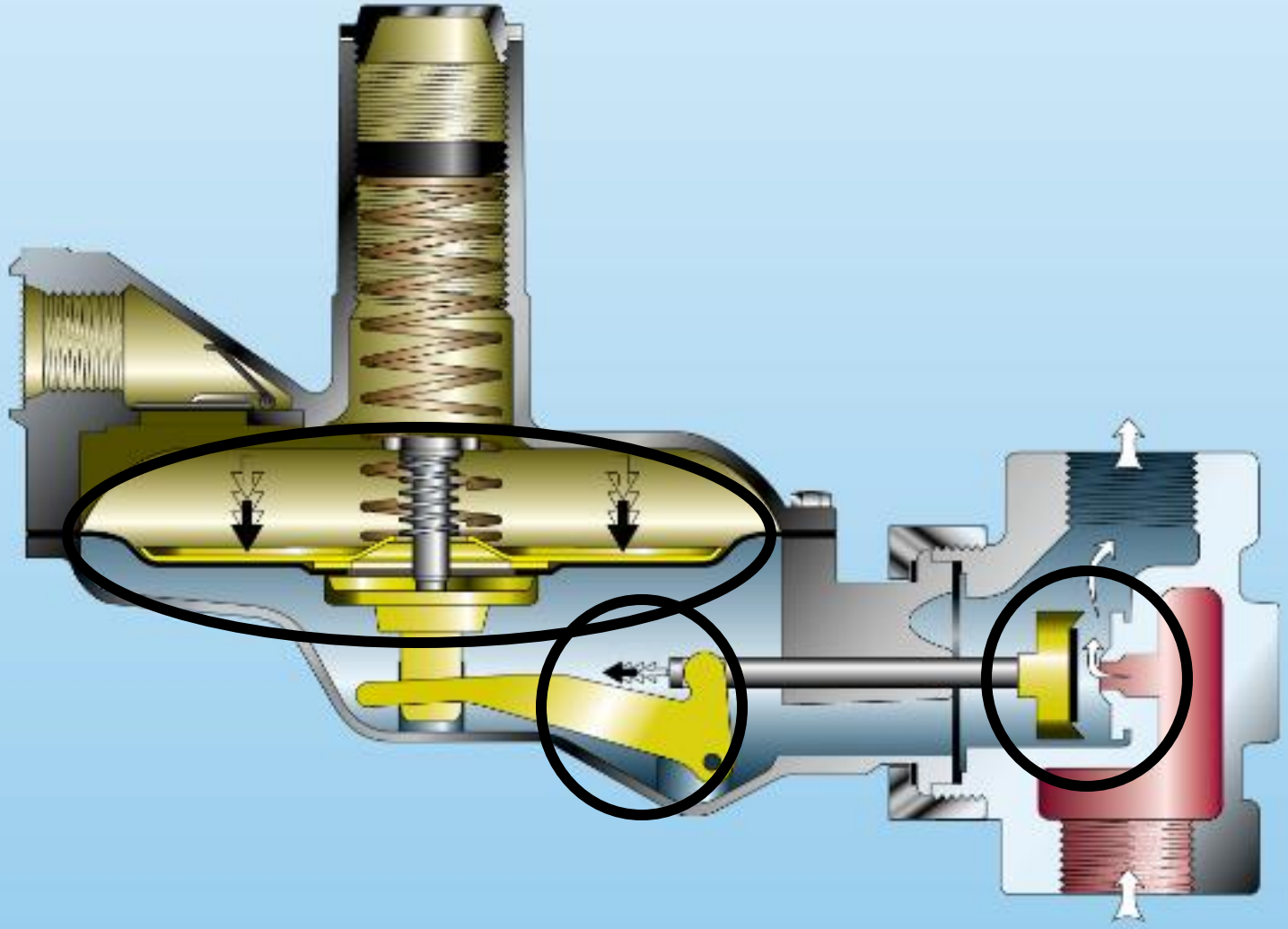

Lever Acting – Open Position

IRV in Closed Position

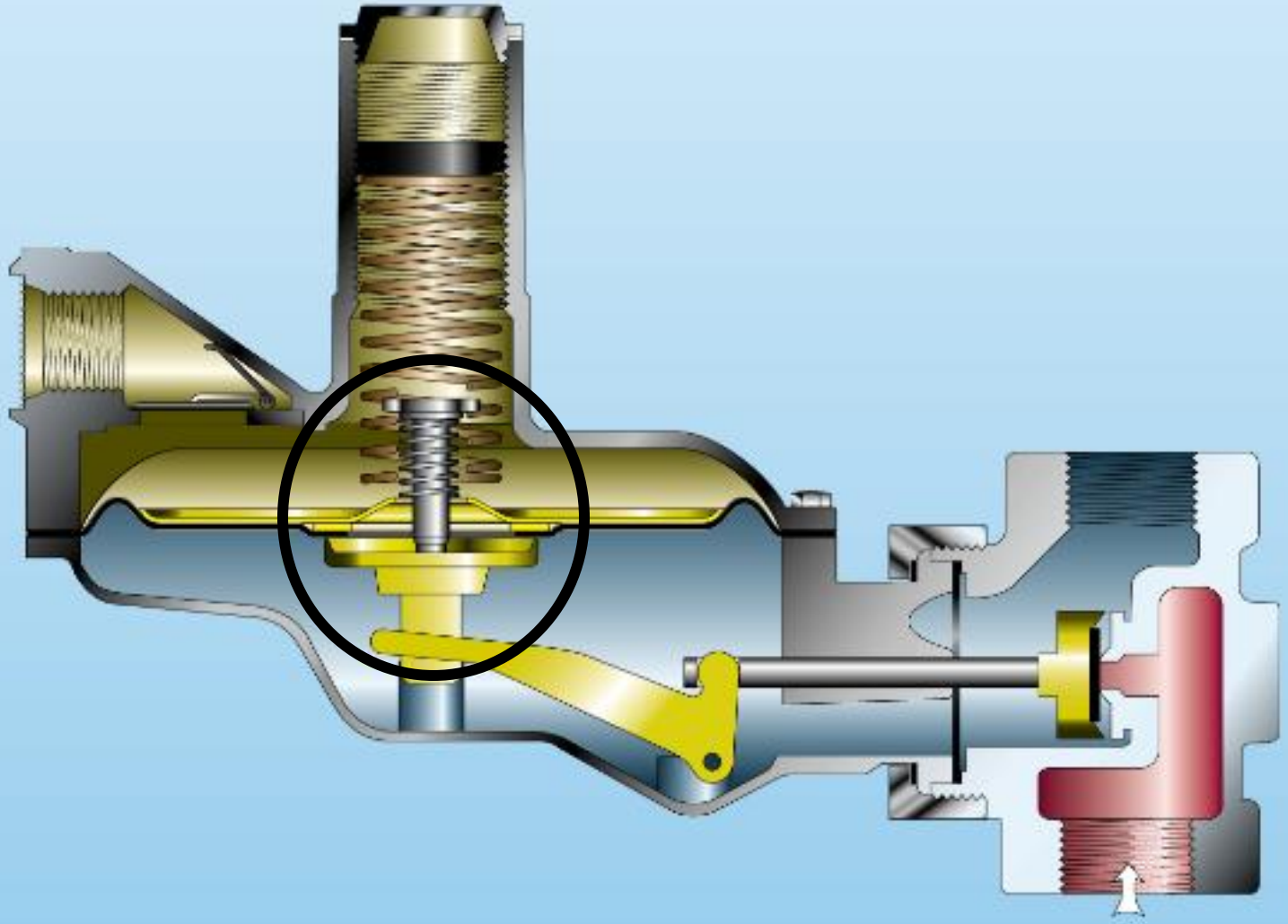

IRV in Open Position

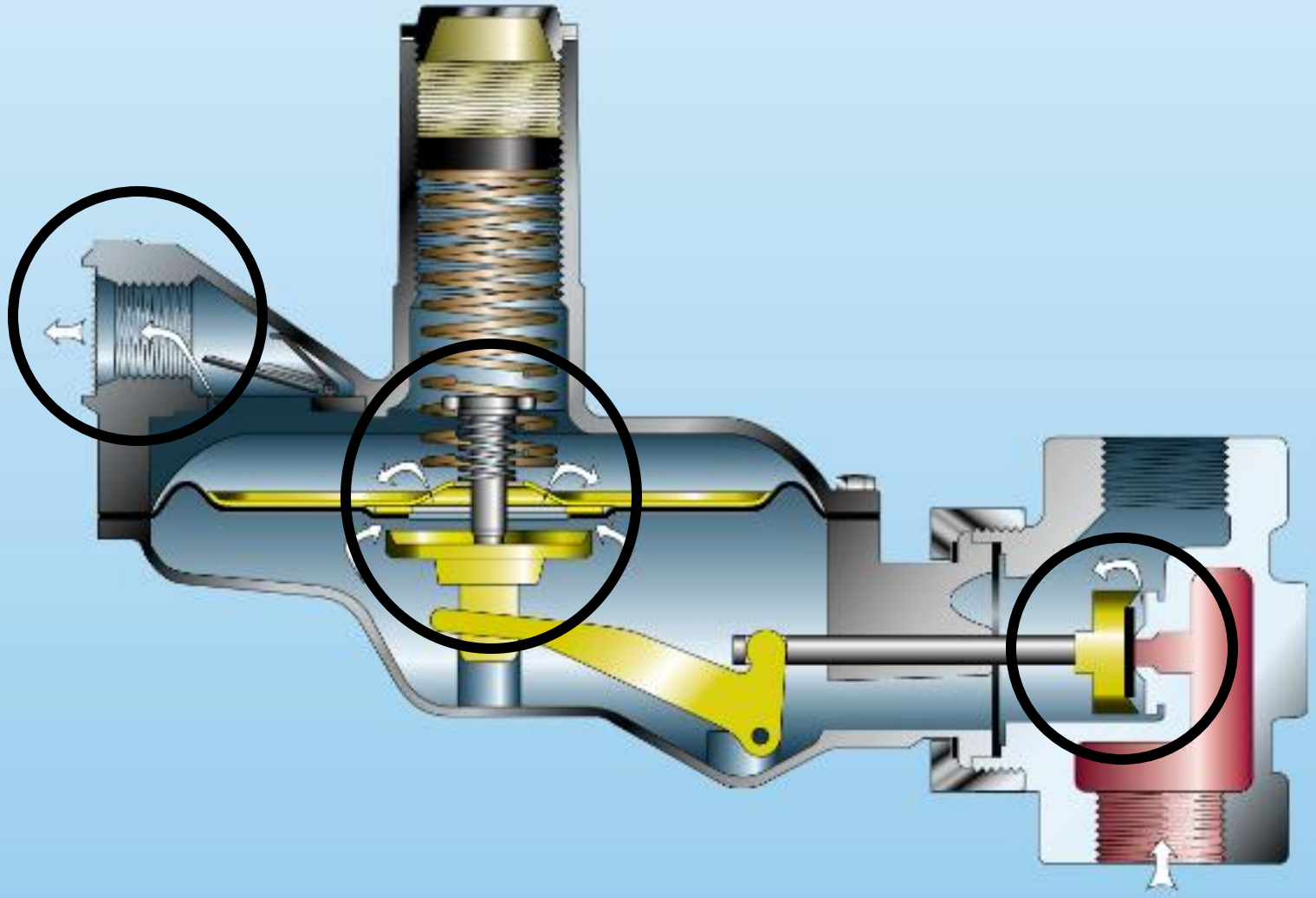

Self-Operated Regulators

- Narrow-range of control
- 10-20% droop
- Inexpensive
- Fast response
- Simple

Typical Farm Type Regulator Capacity Tables

Table 6. Type 627R Capacities for 1 and 2-Inch body sizes (1)

OUTLET PRESSURE RANGE, SPRING PART NUMBER, AND COLOR	OUTLET PRESSURE SETTING, PSIG (bar)	INLET PRESSURE, PSIG (bar)	CAPACITIES IN SCFH ($m^3/h(n)$) OF 0.6 SPECIFIC GRAVITY NATURAL GAS					
			Orifice Size, Inches (mm)					
			3/32 (2,4)	1/8 (3,2)	3/16 (4,8)	1/4 (6,4)	3/8 (9,5)	1/2 (12,7)
70 to 150 psig (4,8 to 10,3 bar) 10B3079X012 Red	100 (6,9)	150 (10,3)	1170 (31,4)	2510 (67,3)	5540 (148)	8310 (223)	15,500 (415)	20,300 (544)
		200 (13,8)	1850 (49,6)	3370 (90,3)	7630 (204)	12,000 (322)	20,100 (539)	26,700 (716)
		300 (20,7)	2700 (72,4)	4910 (132)	11,200 (300)	18,200 (488)		
		500 (34,5)	4400 (118)	8090 (217)	18,300 (490)			
		750 (51,8)	6600 (177)	12,000 (322)				
		1000 (69,0)	8700 (233)	16,000 (429)				
		1250 (86,2)	11,000 (295)					
		1500 (103)	13,000 (348)					
		1750 (121)	15,000 (402)					
		2000 (138)	17,000 (456)					
	125 (8,6)	150 (10,3)	1250 (33,5)	2330 (62,4)	5090 (136)	9470 (254)	15,700 (421)	20,800 (557)
		200 (13,8)	1830 (49)	3320 (89)	7360 (197)	13,400 (359)	23,600 (632)	31,300 (839)
		300 (20,7)	2700 (72,4)	4910 (132)	11,200 (300)	19,700 (528)		
		500 (34,5)	4400 (118)	8090 (217)	18,300 (490)			
		750 (51,8)	6600 (177)	12,000 (322)				
		1000 (69,0)	8700 (233)	16,000 (429)				
		1250 (86,2)	11,000 (295)					
		1500 (103)	13,000 (348)					
		1750 (121)	15,000 (402)					
		2000 (138)	17,000 (456)					
	150 (10,3)	200 (13,8)	1760 (47,2)	3200 (85,8)	7020 (188)	12,900 (346)	21,400 (574)	33,300 (892)
		300 (20,7)	2700 (72,4)	4910 (132)	11,200 (300)	17,200 (461)		
		500 (34,5)	4400 (118)	8090 (217)	18,300 (490)			
		750 (51,8)	6600 (177)	12,000 (322)				
		1000 (69,0)	8700 (233)	16,000 (429)				
		1250 (86,2)	11,000 (295)					
		1500 (103)	13,000 (348)					
		1750 (121)	15,000 (402)					
		2000 (138)	17,000 (456)					

1" Fisher Type 627R

FISHER Regulators

1. Capacity is based on 20 percent droop unless otherwise noted below.

- Blank areas indicate where maximum operating pressure for a give orifice is exceeded.

Typical Commercial Type Regulator Capacity Tables

2" Models 243-12-1 and 243-12-2 in SCFH of Natural Gas (0.6 Specific Gravity - 14.65 psia - 60ºF)

Outlet Pressure and Spring	Inlet Pressure psi	Orifice Size and Valve Angle						
		1¼"	1"	¾"	¾"	½"	⅜"	¼"
		30°	30°	30°	10°	10°	10°	10°
Set Point 7" w.c. 1" w.c. Droop Blue Spring 5" to 8½" w.c. **143-16-021-04**	½	2000	1800	1400	1100	700	500	
	1	3400	3000	2200	2000	1200	750	400
	2	6000	5600	4000	3200	2000	1250	600
	5	11000	11000	8000	6000	3700	2100	1000
	10	12500	14000	12000	8400	5600	3300	1400
	15	14000	15000	15000	10000	7100	4000	1750
	25		15000	20000	11500	9500	5300	2400
	40			20000	13500	12000	7500	3200
	60				15000	13000	10000	4400
	80					13000	12000	5600
	100					13000	12000	7000
	125						12000	8000

Last capacity figure in each group indicates maximum allowable inlet pressure (except for emergency conditions).

Heavy stepped line indicates the recommended **maximum capacity and inlet pressure for each orifice** for operation within the *optimum performance range.*

Typical Large Capacity Regulator Tables

2”, 3”, 4” & 6” 441-57S Capacity Table

Inlet Pressure psi	Outlet Pressure psi	2″ 441-57S		3″ 441-57S			4″ 441-57S			6″ 441-57S		
		1¾″ Valve	1½″ Reduced Valve	2⅛″ Valve	1¾″ Reduced Valve	1½″ Reduced Valve	3″ Valve	2⅛″ Reduced Valve	1¾″ Reduced Valve	4¼″ Valve	3″ Reduced Valve	2⅛″ Reduced Valve
50	40	127	99	206	154	99	413	206	126	769	431	206
60	25 & less	202	158	330	246	158	660	330	201	1227	688	330
	30	199	156	325	242	156	649	325	198	1207	677	325
	40	179	140	293	218	140	585	293	178	1089	610	293
	50	138	108	225	168	108	450	225	137	838	470	225
80	35 & less	256	201	418	312	201	835	418	255	1554	871	418
	40	254	199	413	309	199	826	413	252	1537	862	413
	50	239	187	389	291	187	778	389	238	1448	812	389
	60	210	164	342	256	164	684	342	209	1273	714	342
	70	158	123	257	192	123	514	257	157	957	536	257
100	45 & less	311	244	508	379	244	1014	508	310	1887	1058	508
	50	309	242	504	376	242	1007	504	307	1837	1050	504
	60	297	233	484	362	233	968	484	296	1801	1010	484
	70	274	214	446	333	214	892	446	272	1660	930	446
	80	236	185	385	287	185	770	385	235	1432	803	385
125	60 & less	379	297	618	461	297	1234	618	377	2296	1287	618
	70	371	291	605	452	291	1209	605	369	2250	1261	605
	80	355	278	579	432	278	1156	579	353	2151	1206	579
	100	291	228	475	354	228	949	475	290	1765	989	475
150	73 & less	446	350	728	543	350	1454	728	444	2706	1517	728
	80	443	347	722	539	347	1442	722	440	2683	1504	722
	100	412	323	672	502	323	1343	672	410	**2478**	1400	672
175	85 & less	515	404	840	627	404	1678	840	512	—	1750	840
	100	505	395	823	614	395	1644	823	502	—	1715	823
200	100 and less	584	457	952	710	457	1901	952	581	—	1983	952
250		720	564	1174	876	564	2345	1174	716	—	2445	1174
300		856	671	1396	1042	671	**2788**	1396	852	—	**2908**	1396
400		1129	884	1840	1373	884	—	1840	1132	—	—	1840
500		1401	1098	**2284**	1705	1098	—	2284	1394	—	—	**2284**
600		1674	1311	—	2036	1311	—	—	1655	—	—	—
1000		**2764**	**2165**	—	**3362**	**2165**	—	—	**3343**	—	—	—

Typical Large Capacity Regulator Limitations

Maximum Inlet Pressures

Regulator Body Type	Body Materials	Maximum Inlet Pressure
2" Screwed Only	Cast Iron	250 psi
Flanged ANSI 125 lb.	Cast Iron	175 psi*
Flanged ANSI 250 lb.	Ductile Iron	575 psi*
Flanged ANSI 300 lb.	Cast Steel	720 psi*
Flanged ANSI 600 lb.	Cast Steel	1000 psi*

*Please note the following exceptions to the above, based on valve size:

Body Size	Valve	Maximum Inlet Pressure
6"	4¼"	150 psi
6" 4"	3" reduced 3"	300 psi
6" 4" 3"	2⅛" reduced 2⅛" reduced 2⅛"	500 psi

Valve material selection is limited by inlet pressure and differential:

Valve Material	Maximum Inlet Pressure	Maximum Pressure Differential
Buna-N	575 psi	250 psi
Poly-U Red	720 psi	400 psi
Poly-U Tan	1200 psi	600 psi

Maximum Pressure Differential and Maximum Inlet Pressure for Various Soft-Seated Valve Materials*

Valve Material	Maximum Pressure Differential	Maximum Inlet Pressure
Buna-N (black, 50 to 55 duro)	250 psi	575 psig
Polyurethane (red, 65 to 75 duro)	400 psi	720 psig
Polyurethane (tan, 85 to 95 duro)	600 psi	1200 psig

*The differential and inlet pressures given are only to be used as general guidelines. In all cases, pressures must always remain within the ranges specified in Invensys Energy Metering literature. For any given regulator, do not exceed the specified maximum pressures.

The maximum temperature for the above materials is 150°F.

Viton valve material has a maximum temperature rating of 300°F and a maximum pressure differential of 250 psi.

ANY QUESTIONS?